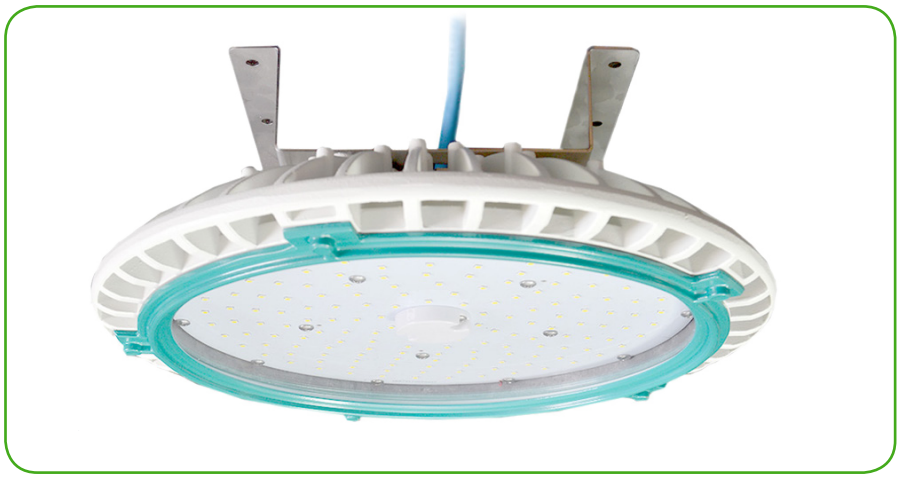

Discus Zero

70W - 200W Spec Sheet

Overview

Designed specifically for temperature controlled environments, Carbon8Lighting's award winning Discus Zero LED High Bay fitting offers all of the benefits of the standard Discus LED High Bay plus some simple innovation that makes it the ideal choice in freezers and cold stores.

By detaching the drive gear and placing it outside the freezer the Discus Zero gives off less heat inside the temperature controlled environment than any other fitting available. Additionally, in the unlikely event of a driver failure, this can be dealt with very simply, outside the temperature controlled environment.

The ultra-efficient Discus Zero Gen3 LED High Bay range offers phenomenal value for money, market leading performance and unparalleled reliability. The Discus Zero range combines high quality materials, leading edge technology and intelligent design to produce a robust and reliable light fitting that is IP65 rated and can operate in the harshest environments.

Features & Benefits

- Die-cast Aluminium Housing with UV stabilized powder coating.
- IP65 Rated.
- Dali Dimming Control (0-10V / PMW).
- Ultra-efficient performance up to 170lm/W.
- Carbon8's Unique 5 Year Premier Care Warranty Program.
- Suitable for food production areas.

Application

WAREHOUSE LIGHTING

www.carbon8lighting.co.uk
01256 300031
sales@c8l.co.uk

Technical Specification

Description: Discus Zero **Recommended Product Location:** Industrial and Fridge/Freezer applications

PRODUCT DETAILS	
Case Material	DIE CAST ALUMINIUM
Voltage	100-305AC
IP Rating	IP65
Typical Lumens per watt	160 lm/w
Colour Rendering	>70 (>80 available)
LED Module	Lumileds
Cable	Artic Cable
Operating Temperature	-40° to +40°
Warranty	5 year Premier Care
Colour Temperature	5000k (4000k & 6500k available special order)
Power Factor	0.9
Lens Material	Polycarbonate
Driver	Meanwell

OPTIONS	
Occupancy Sensor	✓
Light level sensor	✓
Remote Programmable Sensor	✓
Polycarbonate front	Fitted as standard
RGB	✓
12-24v	✓
Emergency	✓
Fixed Bracket Mounting	✓

Performance Chart

LED POWER	CIRCUIT WATTS	TYPICAL LUMENS
70W	77	12320
90W	100	16000
120W	130	20800
150W	160	25600
200W	210	33600

Weight & Dimensions

LED POWER	WEIGHT
70W	3.6 KG'S 320mm
90W	3.0 KG'S 320mm
120W	3.9 KG'S 320mm
150W	4.0 KG'S 320mm
200W	5.0 KG'S 320mm

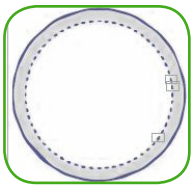

Diagram of Discus Zero (70W, 90W, 120W)

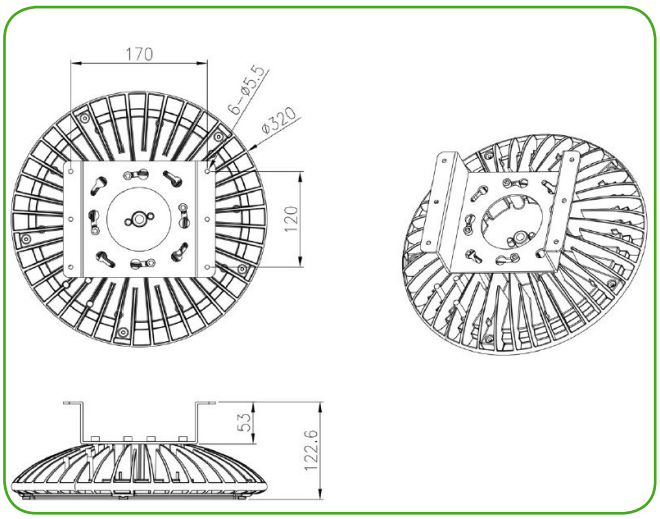

Diagram of Discus Zero (150W, 200W)

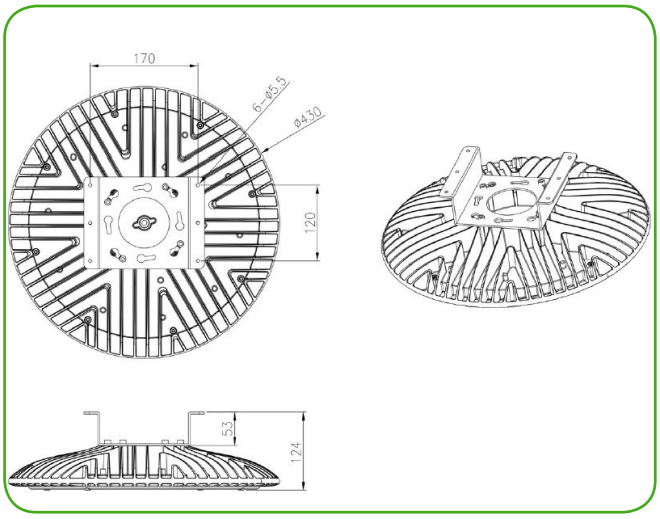

The Discus Zero is covered by Carbon8Lighting's unique 5 Year Premier Care Warranty. Very rarely, even a Carbon8 fitting can become faulty. Should this happen at any point during the 5 year warranty, Carbon8 will send an advance replacement fitting to site, pay up to £250+VAT towards the exchange and collect the swapped fitting from site. As well as minimising down time, this unique warranty reassures customers investing in a Carbon8 product, there will be no hidden cost of ownership.

www.carbon8lighting.co.uk
01256 300031
sales@c8l.co.uk